Cambridge International AS & A Level

Cambridge International Examinations
Cambridge International Advanced Subsidiary and Advanced Level

CANDIDATE NAME

CENTRE NUMBER | | | | | |

CANDIDATE NUMBER | | | | |

2130629329

PHYSICS **9702/41**

Paper 4 A Level Structured Questions **October/November 2016**

2 hours

Candidates answer on the Question Paper.

No Additional Materials are required.

READ THESE INSTRUCTIONS FIRST

Write your Centre number, candidate number and name on all the work you hand in.
Write in dark blue or black pen.
You may use an HB pencil for any diagrams or graphs.
Do not use staples, paper clips, glue or correction fluid.
DO **NOT** WRITE IN ANY BARCODES.

Answer **all** questions.

Electronic calculators may be used.
You may lose marks if you do not show your working or if you do not use appropriate units.

At the end of the examination, fasten all your work securely together.
The number of marks is given in brackets [ ] at the end of each question or part question.

This document consists of **22** printed pages and **2** blank pages.

© UCLES 2016

CAMBRIDGE International Examinations

Data

speed of light in free space	$c = 3.00 \times 10^{8}\,\text{m s}^{-1}$
permeability of free space	$\mu_0 = 4\pi \times 10^{-7}\,\text{H m}^{-1}$
permittivity of free space	$\varepsilon_0 = 8.85 \times 10^{-12}\,\text{F m}^{-1}$
	$(\frac{1}{4\pi\varepsilon_0} = 8.99 \times 10^{9}\,\text{m F}^{-1})$
elementary charge	$e = 1.60 \times 10^{-19}\,\text{C}$
the Planck constant	$h = 6.63 \times 10^{-34}\,\text{J s}$
unified atomic mass unit	$1\,\text{u} = 1.66 \times 10^{-27}\,\text{kg}$
rest mass of electron	$m_e = 9.11 \times 10^{-31}\,\text{kg}$
rest mass of proton	$m_p = 1.67 \times 10^{-27}\,\text{kg}$
molar gas constant	$R = 8.31\,\text{J K}^{-1}\,\text{mol}^{-1}$
the Avogadro constant	$N_A = 6.02 \times 10^{23}\,\text{mol}^{-1}$
the Boltzmann constant	$k = 1.38 \times 10^{-23}\,\text{J K}^{-1}$
gravitational constant	$G = 6.67 \times 10^{-11}\,\text{N m}^2\,\text{kg}^{-2}$
acceleration of free fall	$g = 9.81\,\text{m s}^{-2}$

© UCLES 2016

Formulae

uniformly accelerated motion	$s = ut + \frac{1}{2}at^2$ $v^2 = u^2 + 2as$
work done on/by a gas	$W = p\Delta V$
gravitational potential	$\phi = -\frac{Gm}{r}$
hydrostatic pressure	$p = \rho gh$
pressure of an ideal gas	$p = \frac{1}{3}\frac{Nm}{V}\langle c^2 \rangle$
simple harmonic motion	$a = -\omega^2 x$
velocity of particle in s.h.m.	$v = v_0 \cos \omega t$ $v = \pm \omega \sqrt{(x_0^2 - x^2)}$
Doppler effect	$f_o = \frac{f_s v}{v \pm v_s}$
electric potential	$V = \frac{Q}{4\pi\varepsilon_0 r}$
capacitors in series	$1/C = 1/C_1 + 1/C_2 + \ldots$
capacitors in parallel	$C = C_1 + C_2 + \ldots$
energy of charged capacitor	$W = \frac{1}{2}QV$
electric current	$I = Anvq$
resistors in series	$R = R_1 + R_2 + \ldots$
resistors in parallel	$1/R = 1/R_1 + 1/R_2 + \ldots$
Hall voltage	$V_H = \frac{BI}{ntq}$
alternating current/voltage	$x = x_0 \sin \omega t$
radioactive decay	$x = x_0 \exp(-\lambda t)$
decay constant	$\lambda = \frac{0.693}{t_{\frac{1}{2}}}$

© UCLES 2016

[Turn over

Answer **all** the questions in the spaces provided.

1 A satellite is in a circular orbit of radius r about the Earth of mass M, as illustrated in Fig. 1.1.

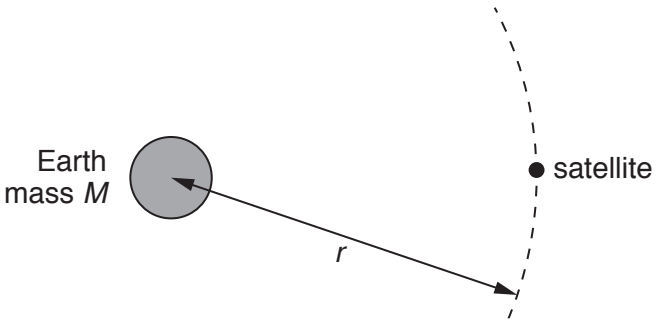

Fig. 1.1

The mass of the Earth may be assumed to be concentrated at its centre.

(a) Show that the period T of the orbit of the satellite is given by the expression

$$T^2 = \frac{4\pi^2 r^3}{GM}$$

where G is the gravitational constant. Explain your working.

[3]

(b) (i) A satellite in geostationary orbit appears to remain above the same point on the Earth and has a period of 24 hours.
State two other features of a *geostationary* orbit.

1. .....

.....

2. .....

.....

[2]

(ii) The mass M of the Earth is 6.0×10^{24} kg.
Use the expression in **(a)** to determine the radius of a geostationary orbit.

radius = ... m [2]

(c) A global positioning system (GPS) satellite orbits the Earth at a height of 2.0×10^{4} km above the Earth's surface.
The radius of the Earth is 6.4×10^{3} km.

Use your answer in **(b)(ii)** and the expression

$$T^2 \propto r^3$$

to calculate, in hours, the period of the orbit of this satellite.

period = ... hours [2]

[Total: 9]

2 An ideal gas initially has pressure 1.0×10^5 Pa, volume 4.0×10^{-4} m^3 and temperature 300 K, as illustrated in Fig. 2.1.

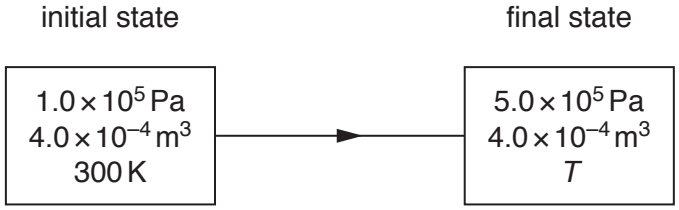

Fig. 2.1

A change in energy of the gas of 240 J results in an increase of pressure to a final value of 5.0×10^5 Pa at constant volume.
The thermodynamic temperature becomes T.

(a) Calculate

(i) the temperature T,

T = ... K [2]

(ii) the amount of gas.

amount = ... mol [2]

© UCLES 2016

(b) The increase in internal energy ΔU of a system may be represented by the expression

$$\Delta U = q + w.$$

(i) State what is meant by the symbol

1. $+q$,

.....

2. $+w$.

.....

[2]

(ii) State, for the gas in **(a)**, the value of

1. ΔU,

ΔU = ... J

2. $+q$,

$+q$ = ... J

3. $+w$.

$+w$ = ... J

[3]

[Total: 9]

3 To demonstrate simple harmonic motion, a student attaches a trolley to two similar stretched springs, as shown in Fig. 3.1.

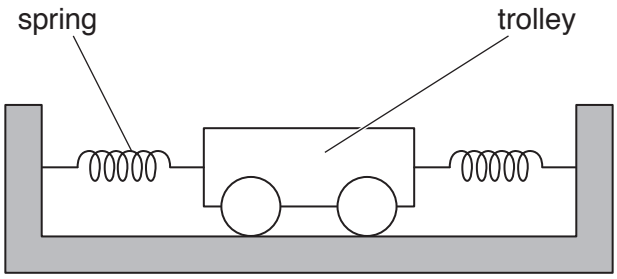

Fig. 3.1

The trolley has mass m of 810 g.

The trolley is displaced along the line of the two springs and then released. The subsequent acceleration a of the trolley is given by the expression

$$a = -\frac{2kx}{m}$$

where the spring constant k for each of the springs is 64 N m^{-1} and x is the displacement of the trolley.

(a) Show that the frequency of oscillation of the trolley is 2.0 Hz.

[3]

(b) The maximum displacement of the trolley is 1.6 cm.
Calculate the maximum speed of the trolley.

speed = ... m s^{-1} [2]

© UCLES 2016

(c) The mass of the trolley is increased. The initial displacement of the trolley remains unchanged.

Suggest the change, if any, that occurs in the frequency and in the maximum speed of the oscillations of the trolley.

frequency: .....

maximum speed: .....
[2]

[Total: 7]

© UCLES 2016

[Turn over

BLANK PAGE

© UCLES 2016

4 **(a)** Signals may be transmitted in either analogue or digital form. One advantage of digital transmission is that the signal can be regenerated.

Explain

(i) what is meant by *regeneration*,

.....

.....

..... [2]

(ii) why an analogue signal cannot be regenerated.

.....

.....

..... [2]

(b) Digital signals are transmitted along an optic fibre using infra-red radiation. The uninterrupted length of the optic fibre is 58 km.

The effective noise level in the receiver at the end of the optic fibre is 0.38 μW.
The minimum acceptable signal-to-noise ratio in the receiver is 32 dB.

(i) Calculate the minimum acceptable power P_{MIN} of the signal at the receiver.

P_{MIN} = ... W [2]

(ii) The input signal power to the optic fibre is 9.5 mW. The output power is P_{MIN}.
Calculate the attenuation per unit length of the optic fibre.

attenuation per unit length = ... dB km^{-1} [2]

[Total: 8]

© UCLES 2016

[Turn over

5 Two small solid metal spheres A and B have equal radii and are in a vacuum. Their centres are 15 cm apart.
Sphere A has charge +3.0 pC and sphere B has charge +12 pC. The arrangement is illustrated in Fig. 5.1.

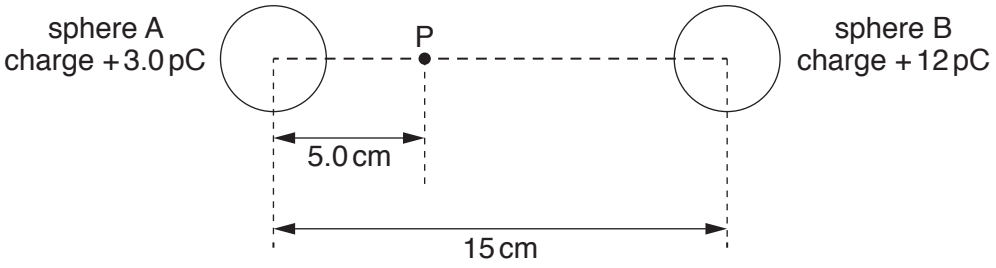

Fig. 5.1

Point P lies on the line joining the centres of the spheres and is a distance of 5.0 cm from the centre of sphere A.

(a) Suggest why the electric field strength in both spheres is zero.

.....

.....

..... [2]

(b) Show that the electric field strength is zero at point P. Explain your working.

[3]

(c) Calculate the electric potential at point P.

electric potential = ... V [2]

© UCLES 2016

(d) A silver-107 nucleus ($^{107}_{47}Ag$) has speed v when it is a long distance from point P.

Use your answer in **(c)** to calculate the minimum value of speed v such that the nucleus can reach point P.

speed = ... $m\,s^{-1}$ [3]

[Total: 10]

6 **(a)** The slew rate of an ideal operational amplifier (op-amp) is said to be infinite.

Explain what is meant by *infinite slew rate*.

.....

.....

..... [2]

(b) The circuit of Fig. 6.1 is designed to indicate whether the temperature of the thermistor is above or below 24 °C.

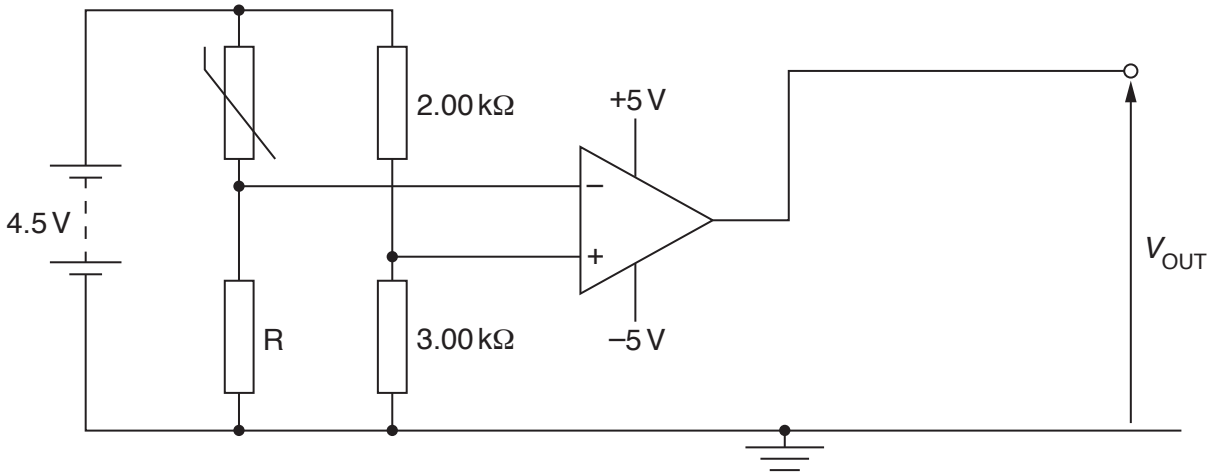

Fig. 6.1

The operational amplifier (op-amp) is assumed to be ideal.

At 24 °C, the resistance of the thermistor is 1.50 kΩ.

(i) Determine the resistance of resistor R such that the output V_{OUT} of the op-amp changes at 24 °C.

resistance = ... Ω [2]

(ii) On Fig. 6.1,

1. draw two light-emitting diodes (LEDs) connected so as to indicate whether the output V_{OUT} of the op-amp is either +5 V or –5 V, [2]

2. label with the letter G the LED that will be emitting light when the temperature is below 24 °C. Explain your working.

.....

.....

..... [3]

[Total: 9]

7 **(a)** Explain what is meant by a *field of force*.

.....

..... [1]

(b) State the type of field, or fields, that will give rise to a force acting on

(i) a moving uncharged particle,

..... [1]

(ii) a stationary charged particle,

..... [1]

(iii) a charged particle moving at an angle to the field or fields.

.....

..... [1]

(c) An electron, mass m and charge $-q$, is moving at speed v in a vacuum. It enters a region of uniform magnetic field of flux density B, as shown in Fig. 7.1.

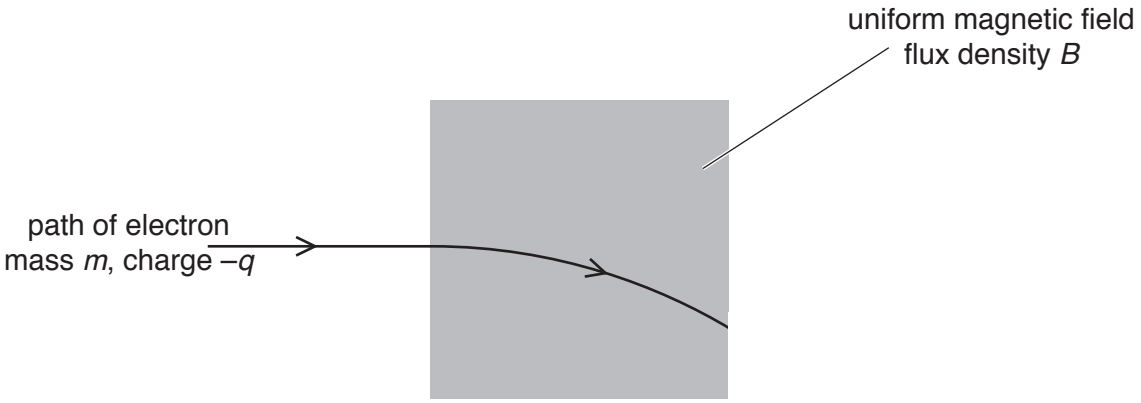

Fig. 7.1

Initially, the electron is moving at right-angles to the direction of the magnetic field.

(i) Explain why the path of the electron in the magnetic field is the arc of a circle.

.....

.....

.....

.....

..... [3]

© UCLES 2016

(ii) Derive an expression, in terms of the radius r of the path, for the linear momentum of the electron. Show your working.

[2]

[Total: 9]

8 Explain the main principles behind the use of nuclear magnetic resonance imaging (NMRI) to obtain diagnostic information about internal body structures.

.....

.....

.....

.....

.....

.....

.....

.....

.....

.....

.....

..... [8]

[Total: 8]

© UCLES 2016

[Turn over

9 **(a)** State Faraday's law of electromagnetic induction.

.....

.....

.....

..... [2]

(b) The diameter of the cross-section of a long solenoid is 3.2 cm, as shown in Fig. 9.1.

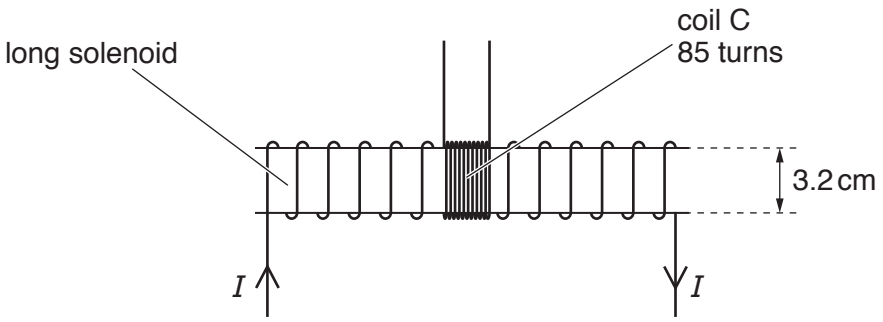

Fig. 9.1

A coil C, with 85 turns of wire, is wound tightly around the centre region of the solenoid.

The magnetic flux density B, in tesla, at the centre of the solenoid is given by the expression

$$B = \pi \times 10^{-3} \times I$$

where I is the current in the solenoid in ampere.

Show that, for a current I of 2.8 A in the solenoid, the magnetic flux linkage of the coil C is 6.0×10^{-4} Wb.

[1]

(c) The current I in the solenoid in **(b)** is reversed in 0.30 s.

Calculate the mean e.m.f. induced in coil C.

e.m.f. = ... mV [2]

(d) The current I in the solenoid in **(b)** is now varied with time t as shown in Fig. 9.2.

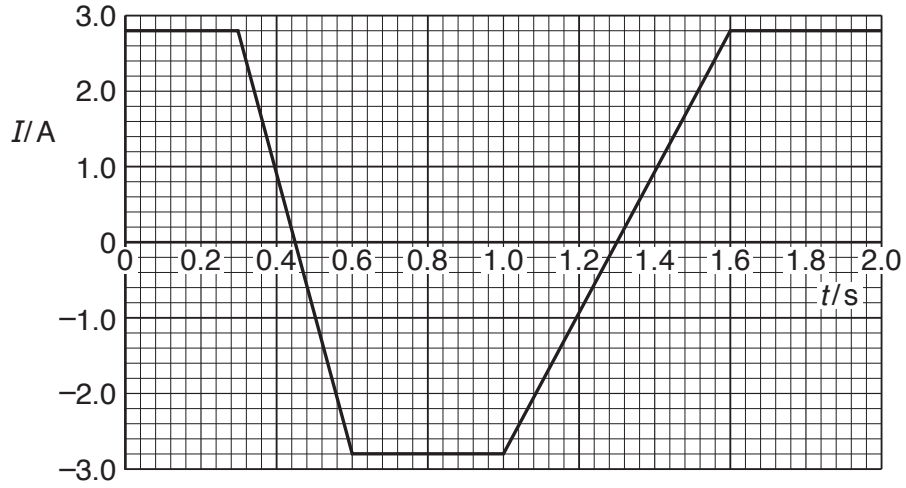

Fig. 9.2

Use your answer to **(c)** to show, on Fig. 9.3, the variation with time t of the e.m.f. E induced in coil C.

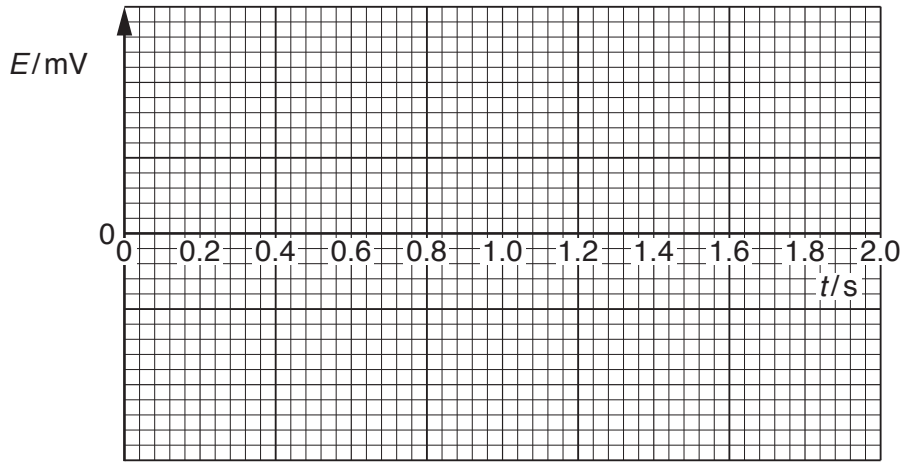

Fig. 9.3

[4]

[Total: 9]

© UCLES 2016

[Turn over

10 (a) Explain what is meant by the *photoelectric effect*.

.....

.....

..... [2]

(b) One wavelength of electromagnetic radiation emitted from a mercury vapour lamp is 436 nm.

Calculate the photon energy corresponding to this wavelength.

energy = ... J [2]

(c) Light from the lamp in **(b)** is incident, separately, on the surfaces of caesium and tungsten metal.

Data for the work function energies of caesium and tungsten metal are given in Fig. 10.1.

metal	work function energy / eV
caesium	1.4
tungsten	4.5

Fig. 10.1

Calculate the threshold wavelength for photoelectric emission from

(i) caesium,

threshold wavelength = ... nm [2]

© UCLES 2016

(ii) tungsten.

threshold wavelength = ... nm [1]

(d) Use your answers in **(c)** to state and explain whether the radiation from the mercury lamp of wavelength 436 nm will give rise to photoelectric emission from each of the metals.

caesium: .....

.....

tungsten: .....

.....

[2]

[Total: 9]

11 Some of the electron energy bands in a solid are illustrated in Fig. 11.1.

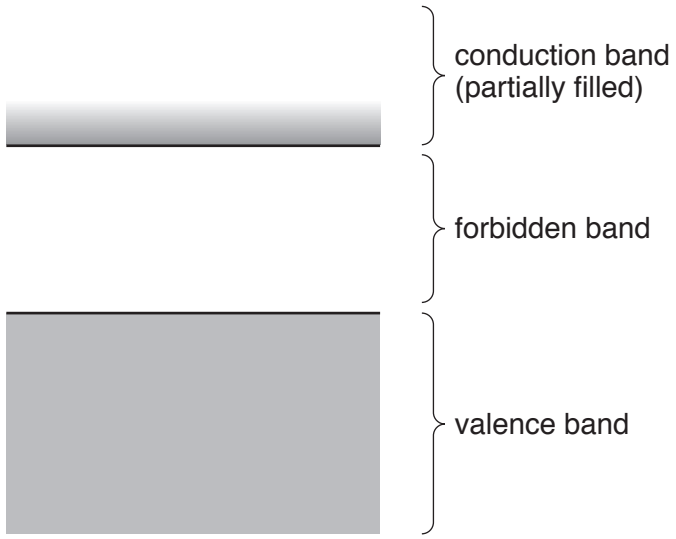

Fig. 11.1

The width of the forbidden band and the number of charge carriers occupying each band depends on the nature of the solid.

Use band theory to explain why the resistance of a sample of a metal at room temperature changes with increasing temperature.

.....

.....

.....

.....

.....

.....

.....

..... [5]

[Total: 5]

© UCLES 2016

12 Radon-222 ($^{222}_{86}$Rn) is a radioactive element found in atmospheric air.
The decay constant of radon-222 is $2.1 \times 10^{-6}\,s^{-1}$.

(a) (i) Define radioactive *half-life*.

.....

.....

..... [2]

(ii) Show that the half-life $t_{\frac{1}{2}}$ is related to the decay constant λ by the expression

$$\lambda t_{\frac{1}{2}} = 0.693.$$

[2]

(b) Radon-222 is considered to be an unacceptable health hazard when the activity of radon-222 is greater than 200 Bq in $1.0\,m^3$ of air.

Calculate the minimum mass of radon-222 in $1.0\,m^3$ of air above which the health hazard becomes unacceptable.

mass = ... kg [4]

[Total: 8]

© UCLES 2016

BLANK PAGE

Permission to reproduce items where third-party owned material protected by copyright is included has been sought and cleared where possible. Every reasonable effort has been made by the publisher (UCLES) to trace copyright holders, but if any items requiring clearance have unwittingly been included, the publisher will be pleased to make amends at the earliest possible opportunity.

To avoid the issue of disclosure of answer-related information to candidates, all copyright acknowledgements are reproduced online in the Cambridge International Examinations Copyright Acknowledgements Booklet. This is produced for each series of examinations and is freely available to download at www.cie.org.uk after the live examination series.

Cambridge International Examinations is part of the Cambridge Assessment Group. Cambridge Assessment is the brand name of University of Cambridge Local Examinations Syndicate (UCLES), which is itself a department of the University of Cambridge.